Sovereign Water

RoyalFlow

Installer Pack

C1 · Home Basic

Boiling, chilled and sparkling, with CO2

THIS PACK

TAP
RoyalFlow C1

SYSTEM
Home Basic

WATER
Boiling, chilled and sparkling, with CO2

CABINET
Single under-sink cabinet, 600 wide

POWER
One fused spur

PACK No.
SWC-RF-C1-HB-BCS

Revision 0 · 19 Oct 2026 · A3 · 9 sheets

Plumbing and electrical work is by others, to the regulations in force.

CONTENTS · RoyalFlow C1 · Home Basic

Work through the sheets in this order. Start with the site checklist, sheet 07, before you order the cabinet or book the fit.

SHEET	NAME	WHAT IT SHOWS	DRAWING No.	PAGE
01	**Cut-out template**	Full-size template for the worktop holes	SWC-RF-C1-HB-BCS-01	3
02	**Drip tray and tap hole**	Tray, cut-out and tap hole sizes	SWC-RF-C1-HB-BCS-02	4
03	**Tap sheet**	The RoyalFlow C1: sizes and connections	SWC-RF-C1-HB-BCS-03	5
04	**Cabinet arrangement**	Where everything goes under the sink	SWC-RF-C1-HB-BCS-04	6
05	**Services schematic**	Water, CO2 and power, and who supplies what	SWC-RF-C1-HB-BCS-05	7
06	**Ventilation**	Grille sizes and air flow in the cabinet	SWC-RF-C1-HB-BCS-06	8
07	**Site checklist**	Survey before you order or book the fit	SWC-RF-C1-HB-BCS-07	9
08	**Installation instructions**	Step by step, in order	SWC-RF-C1-HB-BCS-08	10
09	**Commissioning and handover**	Test, record, and hand over to the customer	SWC-RF-C1-HB-BCS-09	11

Pages 1 and 2 are this cover and contents. Sheet 01 is page 3 of the PDF, and so on.

Sovereign Water			THIRD ANGLE PROJECTION
RoyalFlow home system Cover and Index			Dimensions in millimetres Drawing to BS 8888
DRAWING No. **SWC-RF-C1-HB-BCS-IX**	REVISION **0**	SCALE **NTS**	SHEET **Index**
TITLE **CONTENTS**	DATE **19 OCT 2026**	DRAWN **SOVEREIGN**	SIZE **A3**

WORKTOP CUT-OUT TEMPLATE · C1

RoyalFlow C1 (C shape) · print at 100% on A3

PRINT AT 100%. DO NOT USE “FIT TO PAGE”.

Check the bar at the bottom measures 200 mm.



PRINT CHECK — THIS BAR MUST MEASURE EXACTLY 200 mm

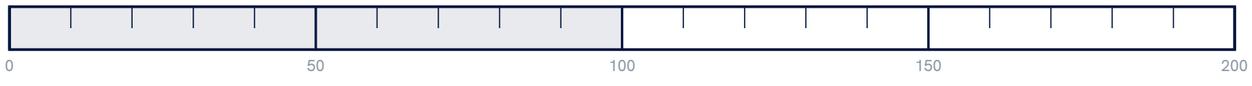

HOW TO USE

1. Check the bar measures 200 mm. If not, reprint.
2. Tape flat on the worktop. Tap hole at least 50 from the wall.
3. Centre-punch the red crosses.
4. Cut ⌀140 and drill the ⌀25 tap hole. No other holes are needed.
5. Deburr and seal the cut edges before fitting.

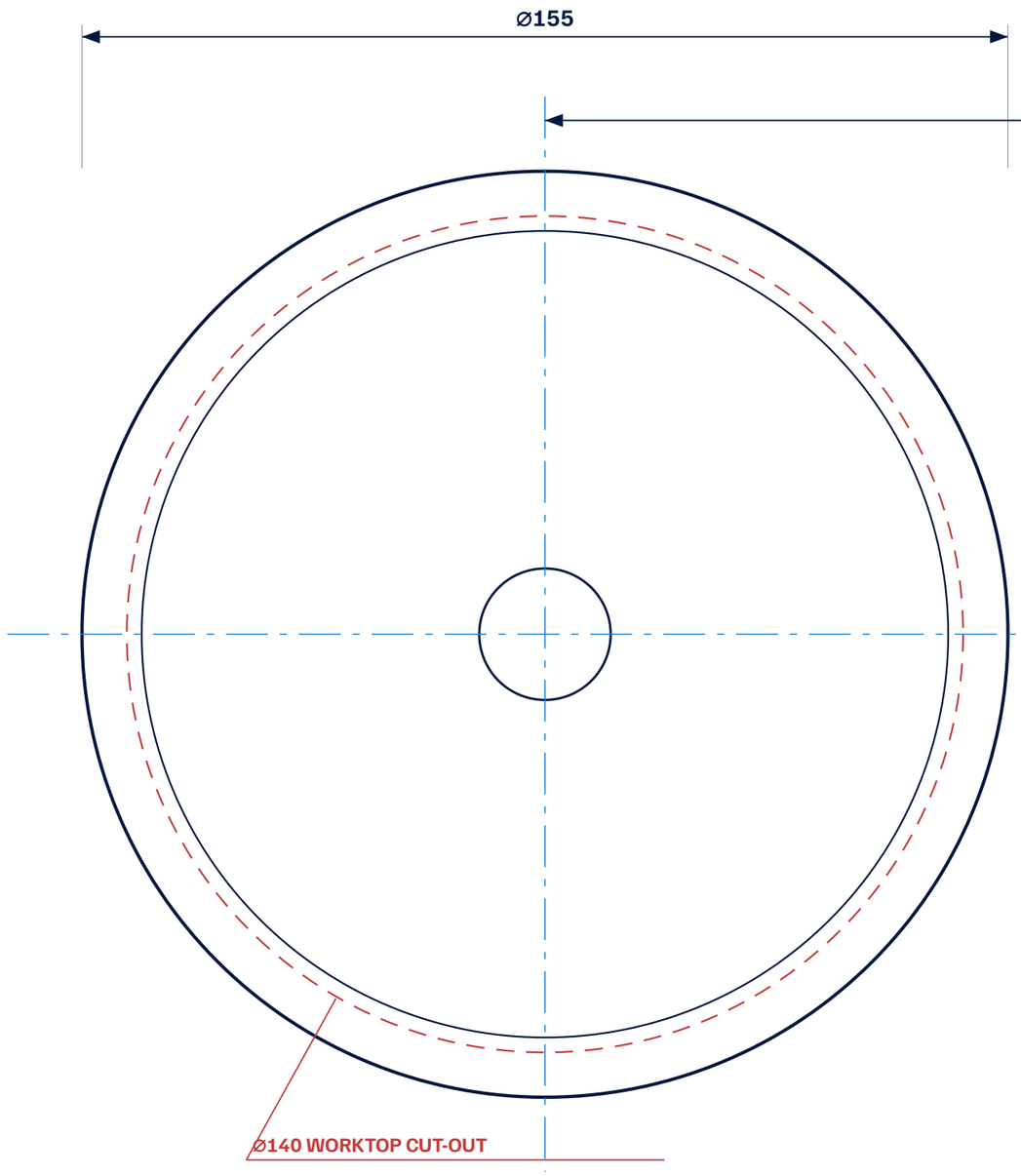

TOP VIEW

SCALE 1:1

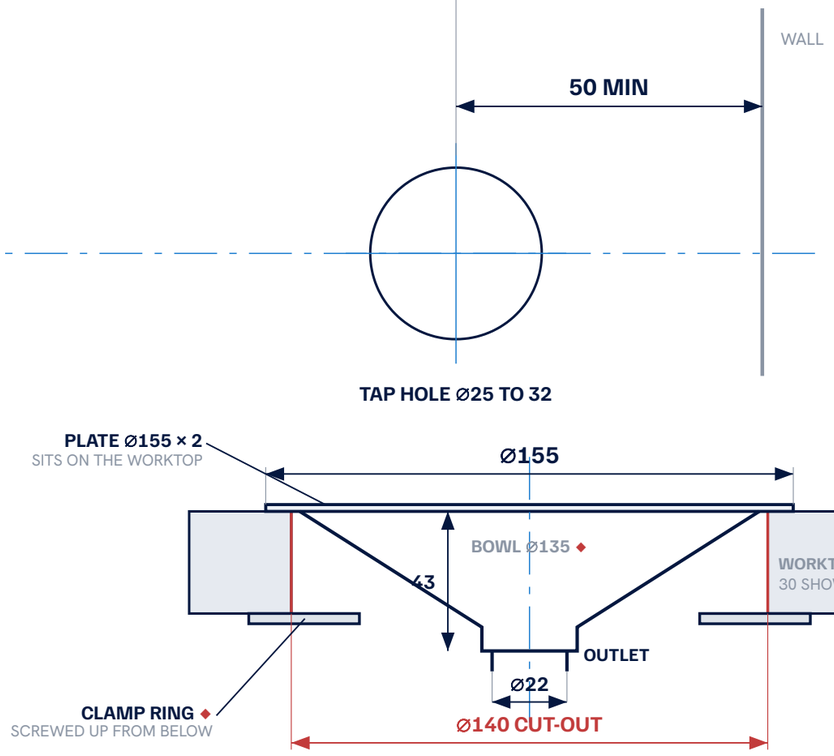

SECTION A–A THROUGH THE FONT

SCALE 1:1.8

◆ SIZE ESTIMATED. CONFIRM AGAINST THE REAL FONT.

NOTES

1. ALL DIMENSIONS ARE IN MILLIMETRES.
2. DRIP TRAY: METAL MESH, ⌀155 × 2 THICK, STAINLESS STEEL, MATT BLACK. WORKTOP HOLE ⌀140.
3. THE TRAY SITS ON THE WORKTOP, COVERING THE ⌀140 HOLE. THE BOWL DROPS THROUGH THE HOLE AND DRAINS THROUGH THE ⌀22 OUTLET.
4. FIT THE CLAMP RING FROM BELOW. TIGHTEN EVENLY. ◆ BOWL DEPTH, OUTLET AND RING SIZES ARE ESTIMATES TO CONFIRM.
5. TAP HOLE ⌀25 TO 32 FOR THE ROYALFLOW C1, CENTRE 200 FROM TRAY CENTRE. MINIMUM 50 FROM THE WALL TO THE HOLE CENTRE.
6. NO OTHER HOLES ARE NEEDED IN THE WORKTOP. SEAL THE CUT EDGES.
7. THE DRAIN HOSE RUNS TO WASTE WITH A CONSTANT FALL, NO KINKS OR SAGS. SEE SHEET 04.

Sovereign Water

THIRD ANGLE PROJECTION

RoyalFlow home system

Drip Tray and Tap Hole

Dimensions in millimetres

Drawing to BS 8888

DRAWING No.	REVISION	SCALE	SHEET
SWC-RF-C1-HB-BCS-02	0	AS NOTED	02 of 09
TITLE	**DATE**	**DRAWN**	**SIZE**
DRIP TRAY / TAP HOLE	19 OCT 2026	SOVEREIGN	A3

C1 TAP

C shape spout

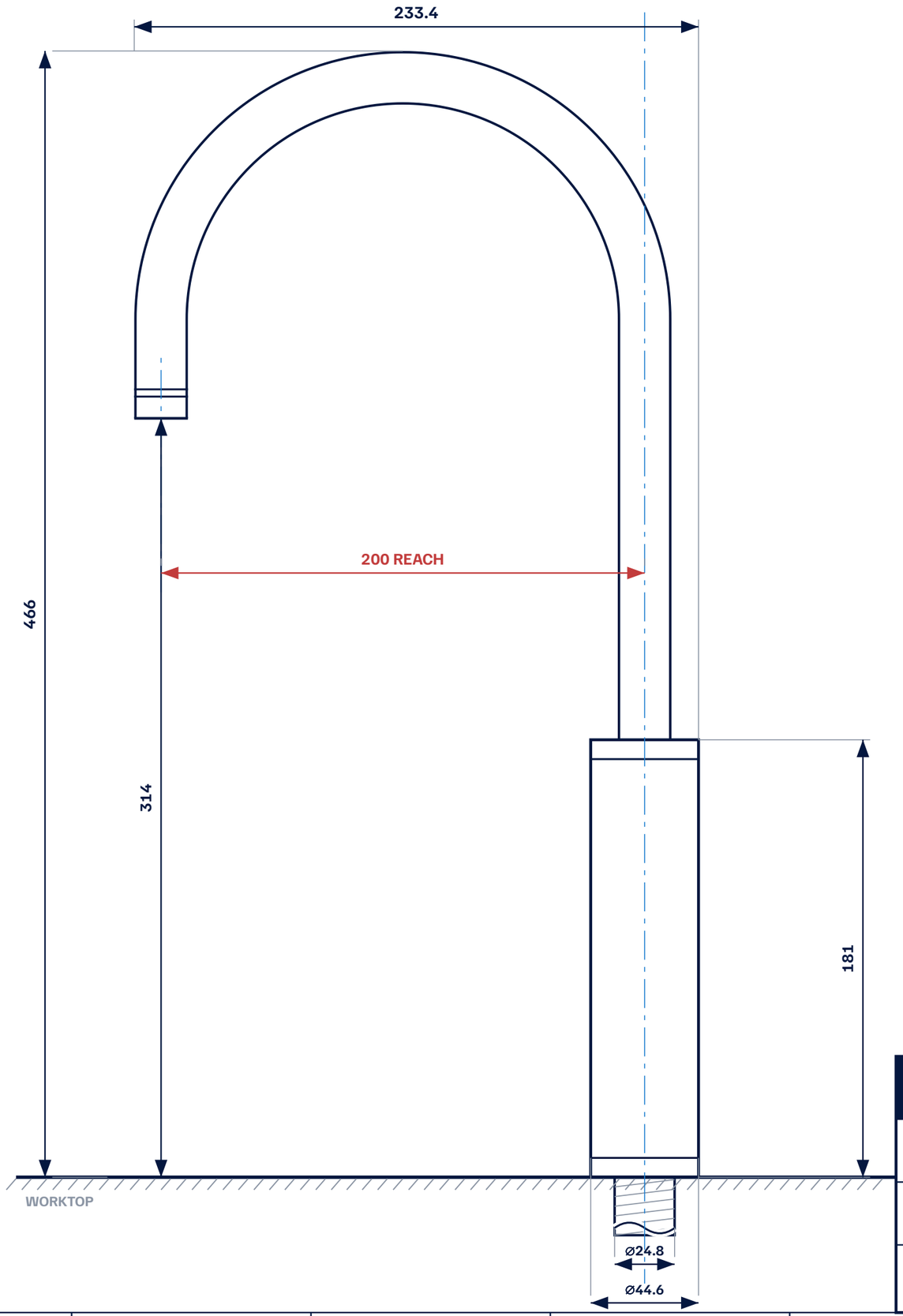

PLAN ON THE WORKTOP

Ø25 hole in red, Ø32 maximum in grey

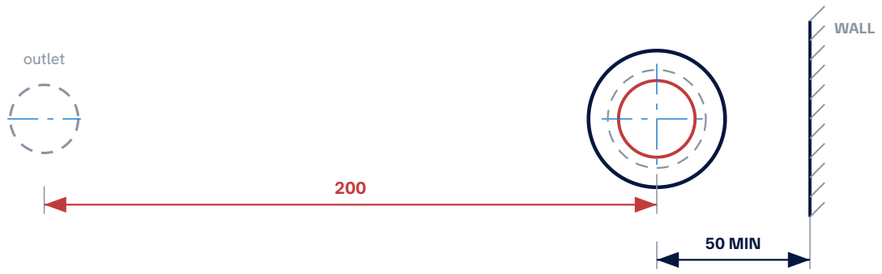

DIMENSIONS · C1	
Overall height	466
Overall projection, maker	233.4
Spout reach, to outlet centre	200
Spout height above the worktop	314
Body height above the worktop	181
Body diameter	Ø44.6
Shank diameter	Ø24.8
Worktop hole	Ø25 to 32
Font cut-out	Ø140
Font to tap hole centres	200
Wall to tap centre, minimum	50

NOTES

1. Dimensions taken from the manufacturer's dimension drawings. Millimetres.
2. The overall projection is the maker's figure, outlet edge to body edge. The reach in red is the centre-to-centre figure the cut-out template uses.
3. Spout tube diameter is not published. It is drawn to suit the maker's overall projection.
4. Shank length below the worktop is not given in the maker's data. Allow for the worktop thickness plus the fixing nut. The shank is shown broken.
5. Drill the tap hole at least 50 from the wall. Use the cut-out template on sheet 01.
6. The tap is shown in profile here. On sheets 03 and 04 it is drawn face on.

Sovereign Water

THIRD ANGLE PROJECTION

RoyalFlow home system

Tap Schematic · C1 (C shape)

Dimensions in millimetres

Drawing to BS 8888

DRAWING No.	REVISION	SCALE	SHEET
SWC-RF-C1-HB-BCS-03	0	1:2	03 of 09
TITLE	**DATE**	**DRAWN**	**SIZE**
TAP SHEET	19 OCT 2026	SOVEREIGN	A3

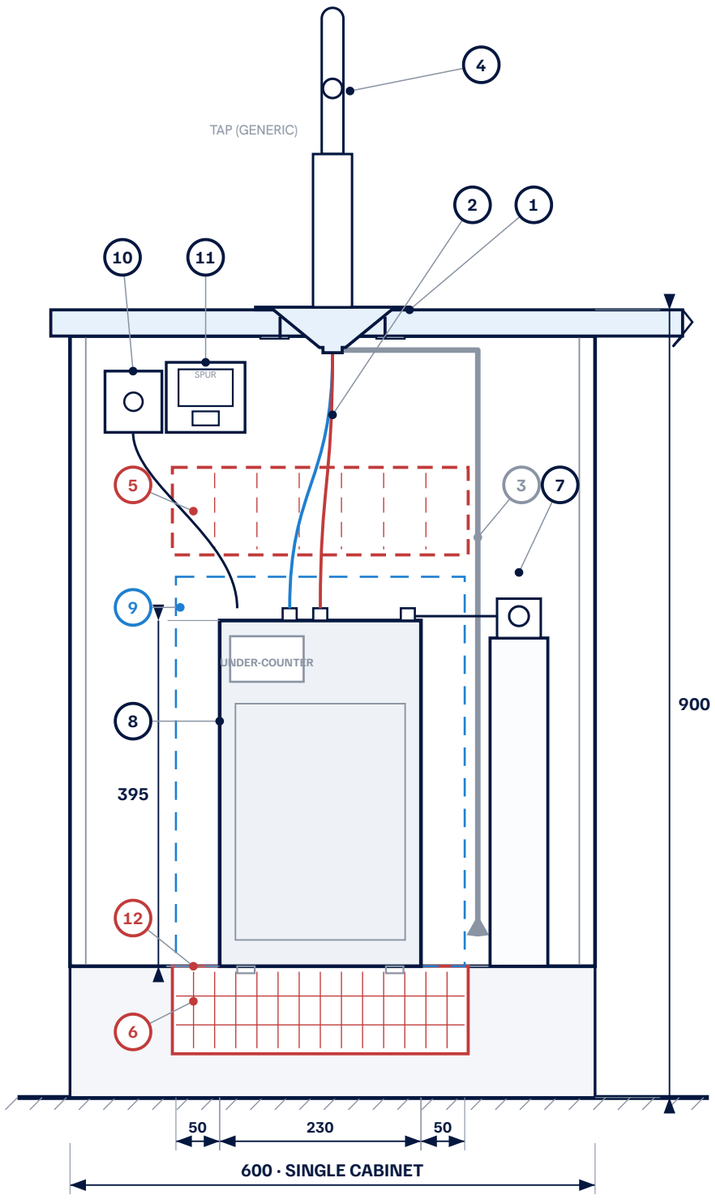

FRONT ELEVATION

Doors removed · scale 1:7

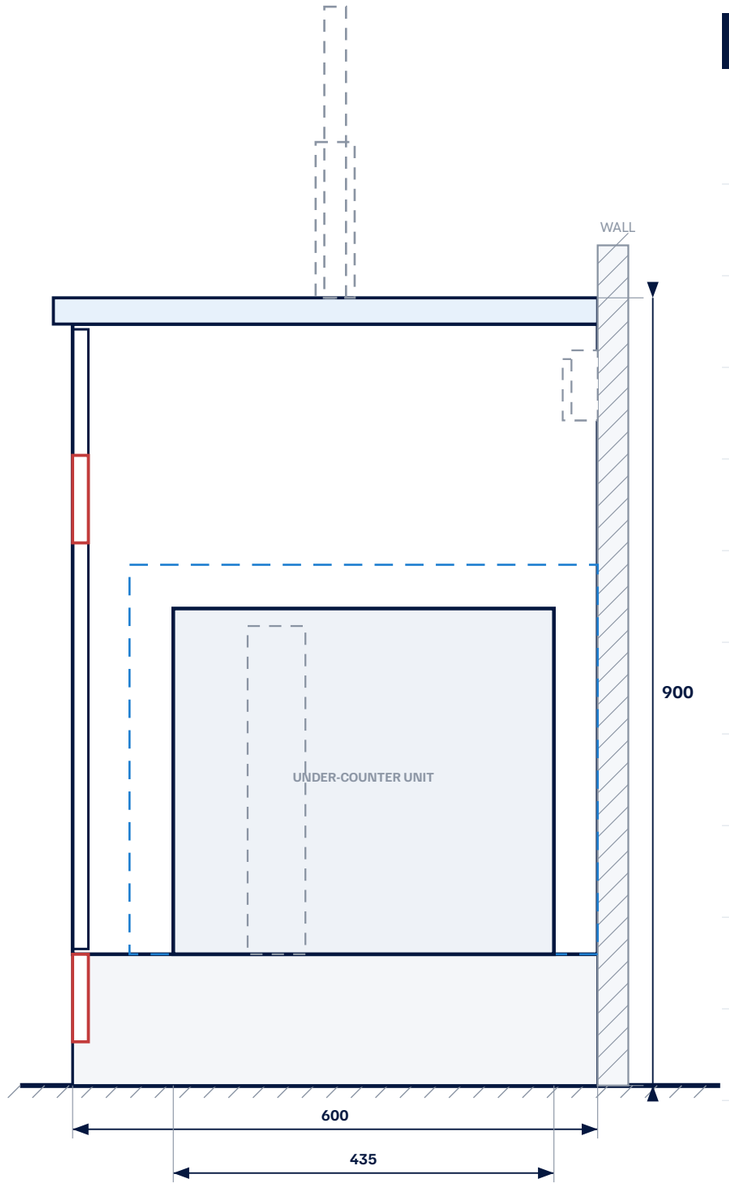

SECTION A-A

through the unit centre line · scale 1:7

KEY

1. **Font and drip tray, counter-sunk**
   ⌀155 plate on top, clamp ring screwed up from below. Sheet 02
2. **Hoses to the tap**
   red hot, blue ambient / chilled / sparkling
3. **Drip tray drain to waste**
   from the font tail, down the right of the unit, to waste by others, with a constant fall
4. **Tap, generic outline**
   S1 size, shown for position. Real shape and height: faucet sheets
5. **Vent-out grille**
   338 × 100 in the door
6. **Air inlet grille**
   338 × 100, top edge on the cabinet base line
7. **CO_2 cylinder, 60 L screw-in**
   ⌀66 × 375 high, about 420 with regulator. Sparkling only
8. **RoyalFlow under-counter unit**
   230 W × 435 D × 395 H
9. **Clearance envelope**
   50 clear on all four sides of the unit
10. **Mains cold water isolation valve**
    not supplied
11. **230 V 13 A switched fused spur**
    by others. One required; the CO_2 needs no power
12. **Cabinet base must be open or vented**
    the kickboard grille feeds the plinth void only

NOTES

1. Home Basic: carbon filtration and UV are built into the unit, so there is nothing extra to fit under the sink.
2. The tap is a generic outline at the S1 size, for position only. Its real shape, height, reach and cut-out are on the tap sheet and worktop template for your faucet.
3. The drip tray and the tap share the unit centre line. The tap hole is cut from the 1:1 worktop template.
4. Single cabinet: 600 wide × 600 deep, worktop 900 high.
5. Keep 50 clear on all four sides of the unit. Do not store goods around it.
6. The kickboard grille feeds the plinth void only. The cabinet base must be open or vented above it.
7. Both grilles are on the unit centre line, air in low and vent out high. Sizes 338 × 100 shown, confirm before ordering.
8. The CO_2 cylinder stands upright and is restrained so it cannot fall. One 13 A fused spur is needed. The CO_2 needs no power. Section shows hidden items dashed.
9. The drip tray drain runs from the font tail to waste, by others, with a constant fall.
10. Floor drain 1.5 inch by others. Plumbing and electrical work by others, to the regulations in force.

Sovereign Water

THIRD ANGLE PROJECTION

RoyalFlow home system

Under-Sink Cabinet Arrangement · Home Basic · with CO_2

Dimensions in millimetres
Drawing to BS 8888

DRAWING No.	REVISION	SCALE	SHEET
SWC-RF-C1-HB-BCS-04	0	1:7	04 of 09

TITLE	DATE	DRAWN	SIZE
CABINET ARRANGEMENT	14 OCT 2026	SOVEREIGN	A3

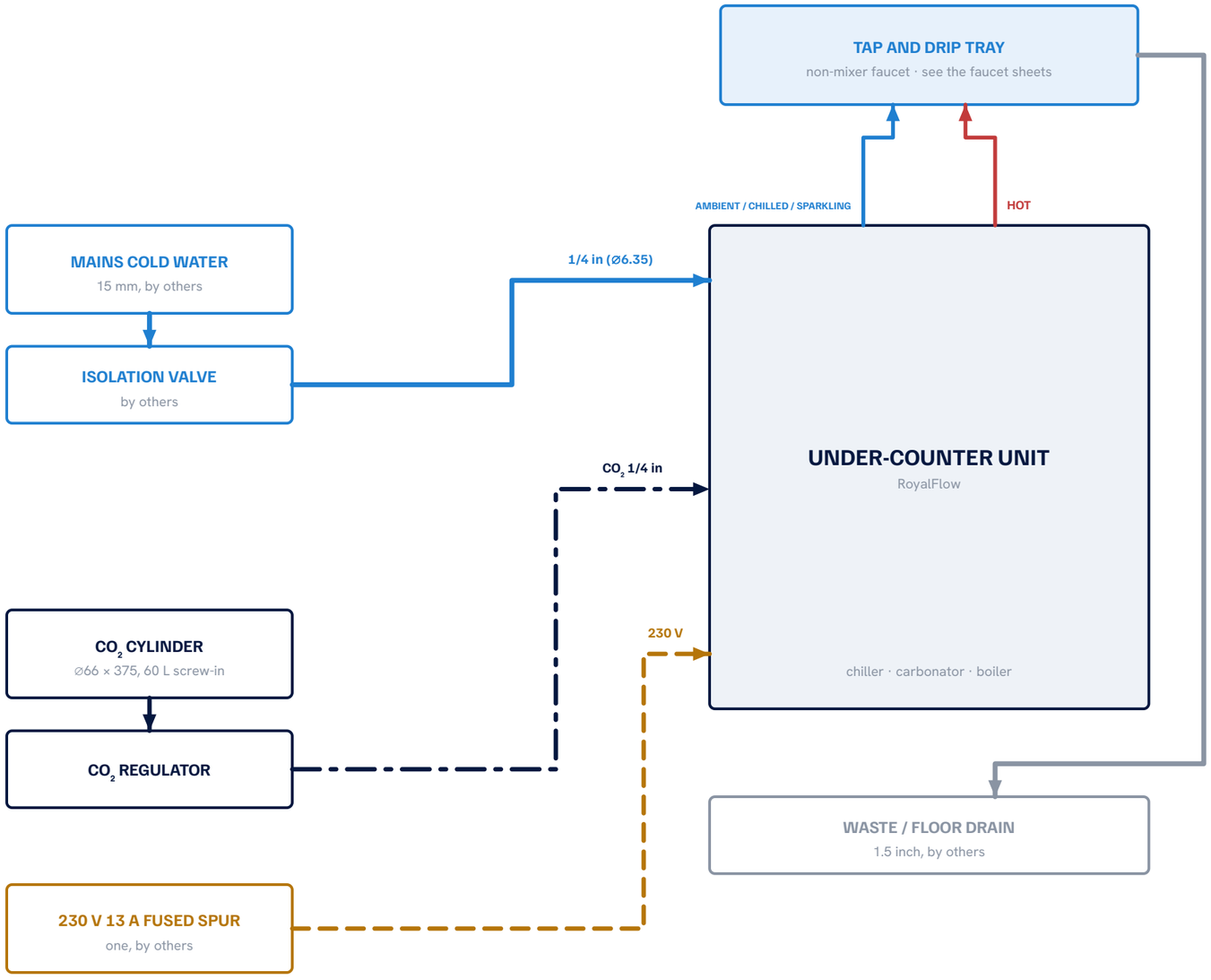

SERVICES AND CONNECTION SCHEMATIC

Schematic only. Not to scale. See sheet 04 for the arrangement.

water · CO_2 · power · drain

CONNECTION SCHEDULE

SERVICE	SIZE / RATING	BY
Mains cold water	15 mm to the isolation valve	Others
Unit water inlet	1/4 inch (Ø6.35 mm)	Sovereign
Inlet pressure	16 to 80 psi	—
Above 80 psi	fit a pressure limiting valve	Others
Blue hose to tap	Ø6.35 mm, sparkling	Sovereign
Red hose to tap: hot	5.5 × 8.5 mm	Sovereign
CO_2 supply	1/4 inch (Ø6.35 mm)	Sovereign
CO_2 cylinder	Ø66 × 375 high, 60 L screw-in	Sovereign
Drip tray drain	to waste, constant fall	Others
Floor drain	1.5 inch	Others
Power	230 V 13 A switched fused spur	Others
Fused spurs required	one	Others
Load, hot	500 W	—
Load, cold	100 W	—

NOTES

1. Schematic only. Not to scale, and it does not show the position of anything. See sheet 04.
2. Check the inlet pressure before connecting. Below 16 psi the unit will not fill, above 80 psi fit a pressure limiting valve.
3. Flush the mains through before connecting the unit, so grit does not reach the inlet valve.
4. The red (hot) hose is 5.5 × 8.5 mm and the blue hose is Ø6.35 mm. They will not swap, do not force them.
5. Home Basic: no extra filter or treatment kit. The mains goes from the isolation valve straight to the unit.
6. The CO_2 cylinder must stand upright and be restrained so it cannot fall.
7. One 13 A fused spur is needed. The CO_2 needs no power.
8. All plumbing and electrical work is by others, to the regulations in force.

Sovereign Water

THIRD ANGLE PROJECTION

RoyalFlow home system

Services and Connection Schematic · Home Basic · with CO_2

Dimensions in millimetres
Drawing to BS 8888

DRAWING No.	REVISION	SCALE	SHEET
SWC-RF-C1-HB-BCS-05	0	NTS	05 of 09
TITLE	**DATE**	**DRAWN**	**SIZE**
SERVICES SCHEMATIC	14 OCT 2026	SOVEREIGN	A3

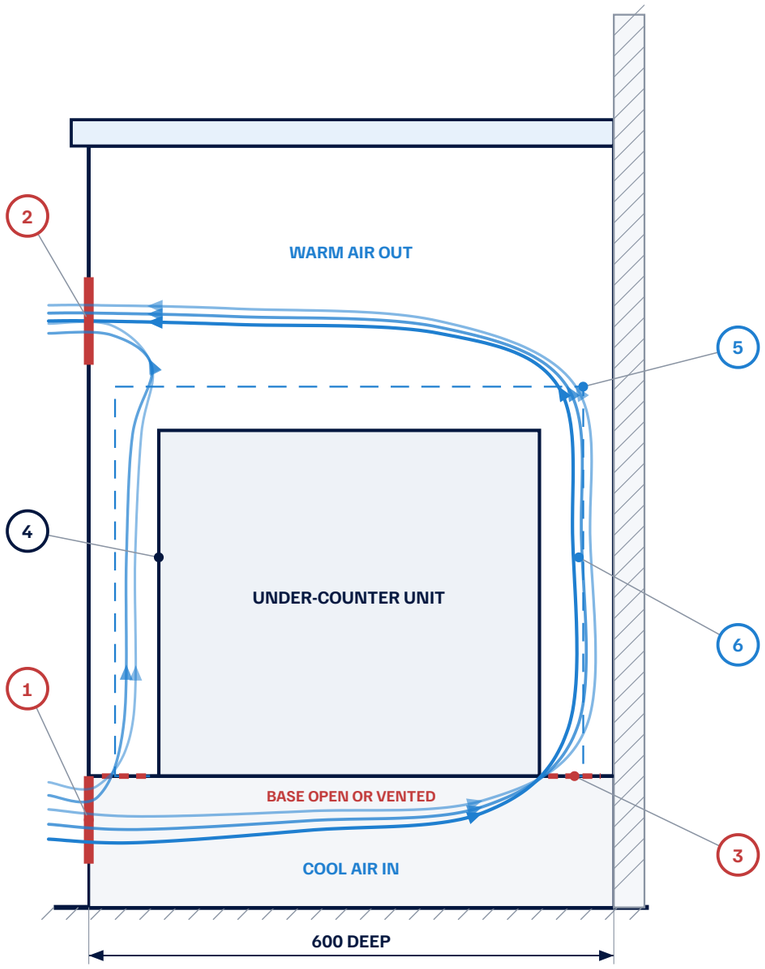

SECTION A–A

through bay 1, looking right · scale 1:7

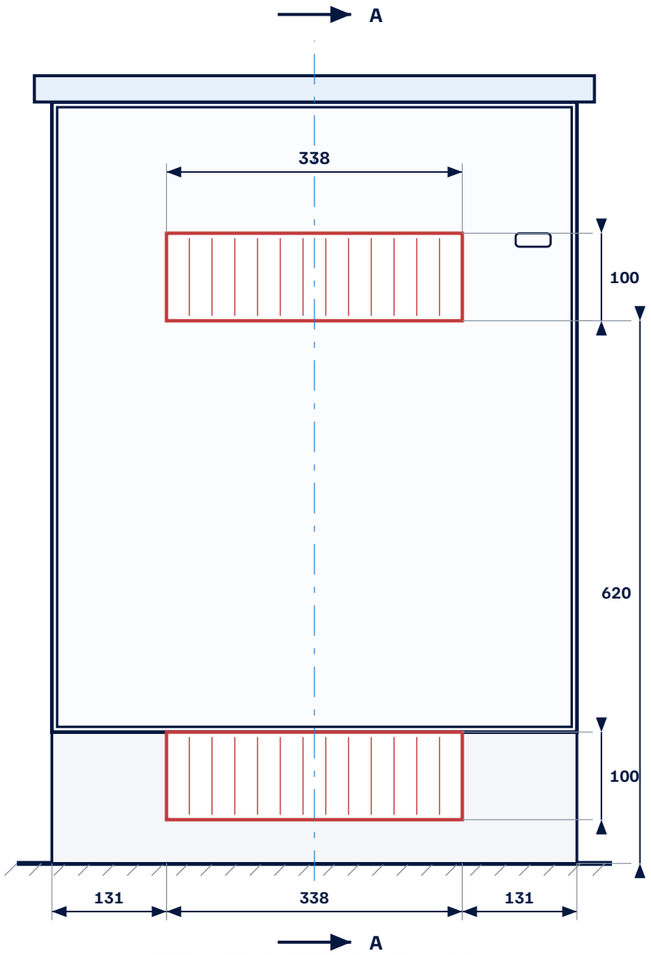

BAY 1 DOOR AND KICKBOARD

front view · scale 1:7

NOTES

1. Both grilles are in bay 1, the cabinet holding the unit, on the same vertical centre line.
2. Grille sizes 338 × 100 shown, as advised by Sovereign. Confirm before ordering the cabinet.
3. Check the free area of the grille you buy. A decorative grille can have less than half the open area of its nominal size.
4. The kickboard grille feeds the plinth void only. The cabinet base above it must be open or vented, or the air stops there.
5. Keep 50 clear on all four sides of the unit. Do not store goods, cloths or chemicals in bay 1.
6. Do not fit a solid plinth seal or a draught strip to the bay 1 door.
7. If the cabinet cannot be vented, refer to Sovereign before installing. A remote or ventilated housing may be needed.

KEY

1 Air inlet grille
338 × 100 in the kickboard, top edge on the base line

2 Vent-out grille
338 × 100 in the bay 1 door

3 Cabinet base open or vented
two openings, in front of and behind the unit

4 RoyalFlow under-counter unit
230 W × 435 D × 395 H

5 Clearance envelope
50 clear on all four sides of the unit

6 Air path
in low, up past the unit front and back, out high

WHY IT MATTERS

The unit rejects heat from the chiller into the cabinet.
With no air path the cabinet warms up, the chiller works harder, drinks come out warmer and the compressor life falls.
Two grilles are needed, not one. Air must be able to enter low and leave high, and it must be able to pass the cabinet base.

Sovereign Water

THIRD ANGLE PROJECTION

RoyalFlow home system
Cabinet Ventilation Arrangement

Dimensions in millimetres
Drawing to BS 8888

DRAWING No.	REVISION	SCALE	SHEET
SWC-RF-C1-HB-BCS-06	0	1:7	06 of 09
TITLE	**DATE**	**DRAWN**	**SIZE**
VENTILATION	19 OCT 2026	SOVEREIGN	A3

SITE SURVEY · complete before ordering the cabinet or booking the fit

SITE / CUSTOMER _____ ADDRESS _____ SURVEYED BY _____ DATE _____

WORKTOP AND FONT

- [ ] Worktop material and thickness _____
- [ ] Depth from wall face to front edge _____
- [ ] Wall to tap hole centre, 50 minimum _____
- [ ] Tap hole to font centre, 200 _____
- [ ] Worktop can be cut in place, or comes out
- [ ] Nothing under the cut line: bracket, rail, cable
- [ ] Cut edges can be sealed after cutting
- [ ] Existing tap or dispenser to be removed

CABINET

- [ ] Single under-sink cabinet, 600 wide
- [ ] Bay width _____
- [ ] Bay depth _____
- [ ] Bay 1 clear inside height, 545 needed _____
- [ ] 50 clear on all four sides of the unit
- [ ] Bay 1 door can be removed or is hinged clear
- [ ] Cabinet make and model, if known _____

VENTILATION

- [ ] Kickboard grille can be cut, 338 × 100
- [ ] Bay 1 door grille can be cut, 338 × 100
- [ ] Cabinet base is open, or can be vented
- [ ] No plinth seal or draught strip fitted
- [ ] Grille free area checked, not just the size
- [ ] Room temperature, 5 to 32 °C _____
- [ ] Vent-out air does not blow at anyone standing there

WATER SUPPLY

- [ ] Mains cold water within reach of bay 1
- [ ] Inlet pressure measured, 16 to 80 psi _____
- [ ] Pressure limiting valve needed above 80 psi
- [ ] Isolation valve fitted, or can be fitted
- [ ] Water hardness, for RO or pre-treatment _____
- [ ] Mains can be flushed before connecting
- [ ] Stopcock location known and reachable
- [ ] Existing filter or softener on the supply _____
- [ ] Mains fed, not tank fed

DRAIN

- [ ] Waste within reach for the tray drain
- [ ] Floor drain 1.5 inch, if specified
- [ ] Fall available from tray to waste

POWER

- [ ] 13 A fused spur in bay 1
- [ ] Spur is not behind the unit
- [ ] Circuit can take 500 W hot plus 100 W cold

CO_2 CYLINDER

- [ ] Room for ⌀66 × 375 cylinder (about 420 with regulator), upright
- [ ] Cylinder can be restrained
- [ ] The CO_2 needs no power

ACCESS AND SITE

- [ ] Route in for the unit, 230 × 435 × 395
- [ ] Parking, lift, and site induction
- [ ] Working hours agreed with the customer

Any box not ticked is an action. Do not book the fit until every action is closed.

FITTED ON THIS JOB · tick each item as you fit it

- [ ] **Under-counter unit** 230 x 435 x 395
- [ ] **Tap, RoyalFlow C1** with font and drip tray
- [ ] **Mains cold valve** isolation
- [ ] **CO2 cylinder and regulator** no power needed
- [ ] **Fused spur, one** by others

Sovereign Water

THIRD ANGLE PROJECTION

RoyalFlow home system
Pre-Installation Site Survey

Dimensions in millimetres
Drawing to BS 8888

DRAWING No.	REVISION	SCALE	SHEET
SWC-RF-C1-HB-BCS-07	0	NTS	07 of 09
TITLE	**DATE**	**DRAWN**	**SIZE**
SITE CHECKLIST	19 OCT 2026	SOVEREIGN	A3

INSTALLATION · work through in order. Do not skip the site checklist, sheet 07.

BEFORE YOU START

1. Read sheets 01 to 06. Confirm the tap you are fitting is the RoyalFlow C1.
2. Complete the site checklist, sheet 07. Close every open action first.
3. Check the box contents against the delivery note.
4. Isolate the mains cold water and the spur.
5. Protect the worktop and the floor before you start cutting.

CUT THE WORKTOP

6. Print the cut-out template, sheet 01, at 100% on A3.
7. Check the print bar on the template measures exactly 200 mm. If not, reprint.
8. Tape the template flat. Keep the tap hole at least 50 from the wall face.
9. Check nothing sits under the cut line: bracket, rail, cable, pipe.
10. Centre-punch the two red crosses through the template.
11. Cut the ⌀140 font hole and drill the ⌀25 tap hole. No other holes are needed.
12. Deburr and seal the cut edges. Let the sealer cure before fitting.

FIT THE FONT AND TAP

13. Bed the ⌀176 flange on sealant and drop the font through the ⌀140 hole.
14. From below, slide the stainless clamp ring over the font body. Line its three holes up with the bosses.
15. Fit the three screws from below and tighten evenly. The worktop is clamped between flange and ring.
16. Fit the tap in the ⌀25 hole and check the spout points over the tray.
17. Run the tray drain hose to waste with a constant fall, no kinks or sags. See sheet 04.
18. Wipe off surplus sealant before it cures.

Plumbing and electrical work is by others, to the regulations in force.

PLACE THE UNIT

19. Put the unit in bay 1. Keep 50 clear on all four sides.
20. Level the unit and check it sits flat on the cabinet base.
21. Check the door still closes with the unit in place.
22. Route the hoses so they are not kinked, trapped or under tension.

WATER

23. Measure the inlet pressure. It must be 16 to 80 psi.
24. Above 80 psi, fit a pressure limiting valve before the unit.
25. Fit the isolation valve if there is not one already.
26. Flush the mains through to waste before connecting, so grit does not reach the inlet valve.
27. Connect the 1/4 inch (⌀6.35) inlet. See the services schematic, sheet 05.
28. Connect the hoses to the tap. Hot is 5.5 × 8.5, the rest are ⌀6.35. Do not force them.

CO_2

29. Stand the ⌀66 × 375 cylinder upright.
30. Restrain the cylinder so it cannot fall.
31. Fit the regulator and connect the 1/4 inch CO_2 line to the unit.
32. The CO_2 needs no power. Leak-test every CO_2 joint before you leave.

POWER

33. 13 A fused spur in bay 1, by others.
34. Do not site the spur behind the unit where you cannot reach it.
35. Check the circuit takes the load: 500 W hot plus 100 W cold.

VENTILATION

36. Cut the kickboard grille, 338 × 100, top edge on the cabinet base line.
37. Cut the vent-out grille, 338 × 100, in the bay 1 door.
38. Both grilles go in bay 1, on the same vertical centre line. See sheet 06.
39. Open or vent the cabinet base. The kickboard grille feeds the plinth void only.
40. Do not fit a plinth seal or a draught strip to the bay 1 door.

BEFORE YOU COMMISSION

41. Check every joint for leaks with the water on and the power off.
42. Check nothing is stored in bay 1.
43. Clear the site and clean the worktop and the tray.
44. Go to sheet 09, commissioning and handover.

FITTED ON THIS JOB · tick each item as you fit it

- ☐ **Under-counter unit** 230 x 435 x 395
- ☐ **Tap, RoyalFlow C1** with font and drip tray
- ☐ **Mains cold valve** isolation
- ☐ **CO2 cylinder and regulator** no power needed
- ☐ **Fused spur, one** by others

WARNINGS

- A CO_2 cylinder that is not restrained can fall and shear its valve. Restrain it before you charge the system.
- Never force a fitting. If a hose will not seat, check the port and the size.
- An unvented cabinet will overheat. Two grilles are needed, not one, and the base must let air through.
- Do not run the unit dry. Fill and purge before switching the boiler on. See sheet 09.

Sovereign Water

THIRD ANGLE PROJECTION

RoyalFlow home system
Installation Instructions

Dimensions in millimetres
Drawing to BS 8888

DRAWING No.	REVISION	SCALE	SHEET
SWC-RF-C1-HB-BCS-08	0	NTS	08 of 09
TITLE	**DATE**	**DRAWN**	**SIZE**
INSTALLATION	19 OCT 2026	SOVEREIGN	A3

COMMISSIONING AND HANDOVER · complete on the day, leave a copy with the customer

SITE / CUSTOMER _____ MODEL AND SERIAL No. _____ ENGINEER _____ DATE _____

COMMISSIONING

1. Check the installation against sheet 08 before you power up.
2. Open the CO_2 cylinder slowly and leak-test every joint. The CO_2 needs no power.
3. Open the isolation valve. Check every joint, with the power still off.
4. Fill the unit and purge all air before switching the boiler on. Do not run it dry.
5. Run each outlet to waste until the water runs clear and steady.
6. Switch on. Let the unit reach temperature before you test anything.
7. Draw off and taste each outlet the tap gives: hot, and ambient, chilled or sparkling as fitted.
8. Check the tray drains freely and the waste does not weep.
9. Check the tap is tight in the worktop and the font flange is sealed.
10. Refit the bay 1 door and check both grilles are clear.
11. Record the readings opposite.
12. Clean down and remove all packaging from site.

IF SOMETHING IS WRONG

- No fill or slow fill: check the inlet pressure is above 16 psi and the mains is not still isolated.
- Water warm: check both grilles are clear and the cabinet base lets air through. See sheet 06.
- No sparkle: check the cylinder is open and not empty, and check the regulator.
- Weeping fitting: do not overtighten. Isolate, remake the joint, retest.
- Anything you cannot clear on the day: leave the unit isolated and call Sovereign.

RECORDED VALUES

MEASUREMENT	LIMIT	RECORDED
Unit serial number	—	
Mains inlet pressure	16 to 80 psi	
Pressure limiter fitted	yes / no / n.a.	
Room temperature	5 to 32 °C	
Flush volume to waste	record	
Hot water at the tap	record	
Blue pipe water at the tap	record	
CO_2 regulator pressure	set by Sovereign	
CO_2 cylinder serial	—	
Treatment kit fitted	none	
Filter or cartridge fitted, date	—	
Next service due	—	

Limits shown as “record” are not published in the manufacturer data we hold. Write down the reading and confirm it with Sovereign before you sign off.

HANDOVER TO THE CUSTOMER

- [ ] Show them how to draw each type of water.
- [ ] Show them the isolation valve and how to turn the water off.
- [ ] Show them the spur and which switch feeds the unit.
- [ ] Show them the cylinder, and explain who changes it.
- [ ] Explain that bay 1 is not storage and the grilles must stay clear.
- [ ] Explain the tray drains to waste and must not be blocked.
- [ ] Explain how to clean the tap and tray, and what not to use.
- [ ] Give them the filter change interval and the next service date.
- [ ] Give them the Sovereign contact for a fault or a service call.
- [ ] Leave the user guide and a copy of this sheet.

LEFT ON SITE

- [ ] User guide
- [ ] This commissioning sheet, signed
- [ ] Cut-out template used, sheet 01
- [ ] Filter or treatment paperwork, if fitted
- [ ] Spare CO_2 cylinder, if supplied

FITTED ON THIS JOB · tick each item as you fit it

- [ ] **Under-counter unit** 230 x 435 x 395
- [ ] **Tap, RoyalFlow C1** with font and drip tray
- [ ] **Mains cold valve** isolation
- [ ] **CO2 cylinder and regulator** no power needed
- [ ] **Fused spur, one**

SIGN-OFF

ENGINEER NAME _____ SIGNATURE _____ DATE _____

CUSTOMER NAME _____ SIGNATURE _____ DATE _____

Sovereign Water

THIRD ANGLE PROJECTION

RoyalFlow home system
Commissioning and Handover

Dimensions in millimetres
Drawing to BS 8888

DRAWING No.	REVISION	SCALE	SHEET
SWC-RF-C1-HB-BCS-09	0	NTS	09 of 09

TITLE	DATE	DRAWN	SIZE
COMMISSIONING	19 OCT 2026	SOVEREIGN	A3